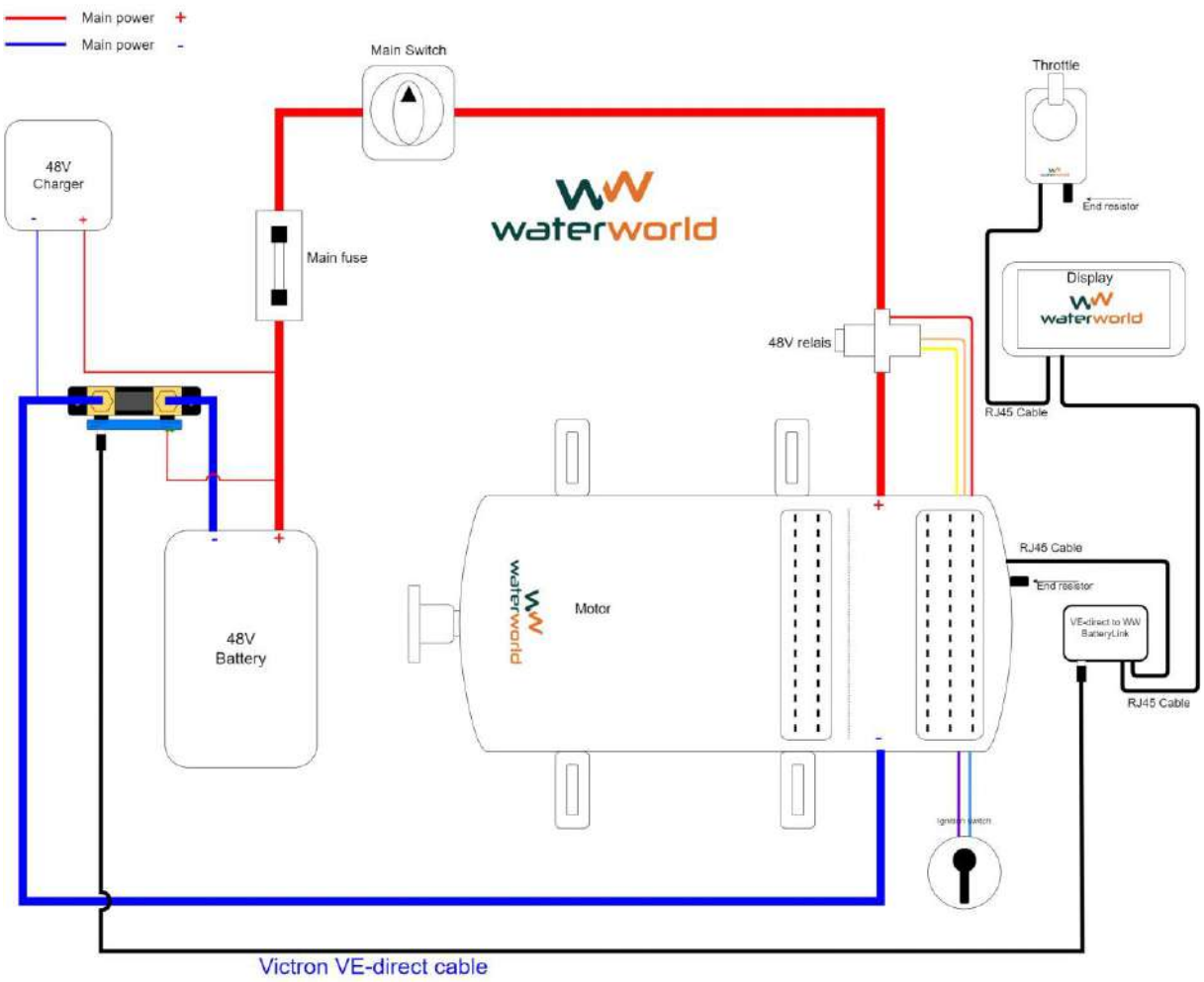
Main power +
Main power -
Main Switch
Throttle
48V Charger
Main fuse
waterworld
End resistor
Display
waterworld
48V relais
RJ45 Cable
48V Battery
Motor
waterworld
RJ45 Cable
End resistor
VE-direct to WW BatteryLink
RJ45 Cable
Ignition switch
Victron VE-direct cable